TECHNICAL DATA

ORDERING INFORMATION

CODE	PRODUCT CODE	DESCRIPTION	PRODUCT NUMBER	CARTON QTY
01696	EV-LEDFIRE-LITE	Ledfire Lite Emergency Luminaire, white	9336462016961	4
11405	EV-LEDFIRE-LITE-B	Ledfire Lite Emergency Luminaire, black	9336462114056	4

OPERATIONAL INFORMATION

GENERAL

Voltage	~230V	Emergency classification	D50
Frequency	50 Hz	Mounting type	Recessed mounting
Ambient temp.	0 - 40°C	Wiring	Flex & plug
Class	2	Lamp power	2.7 W (D50)
Duration	90 / 120 min	Avg. circuit power	0.45 W
IP rating	IP20	Max. circuit power	2.5 W

BATTERY

Battery type	LiFePO4
Battery voltage	6.4 V
Battery code	01302
Charging time	16 hours
Charger type	Variable

CONSTRUCTION AND DIMENSIONS

BODY	PC
DISH	PC
CUT OUT**	70 mm
CUT OUT*	75 - 130 mm

NOTE: For more information on the chemical resistance of our polycarbonate, please see the technical downloads page at **ektor.com.au**

** Size of outer ring
* Size of inner ring

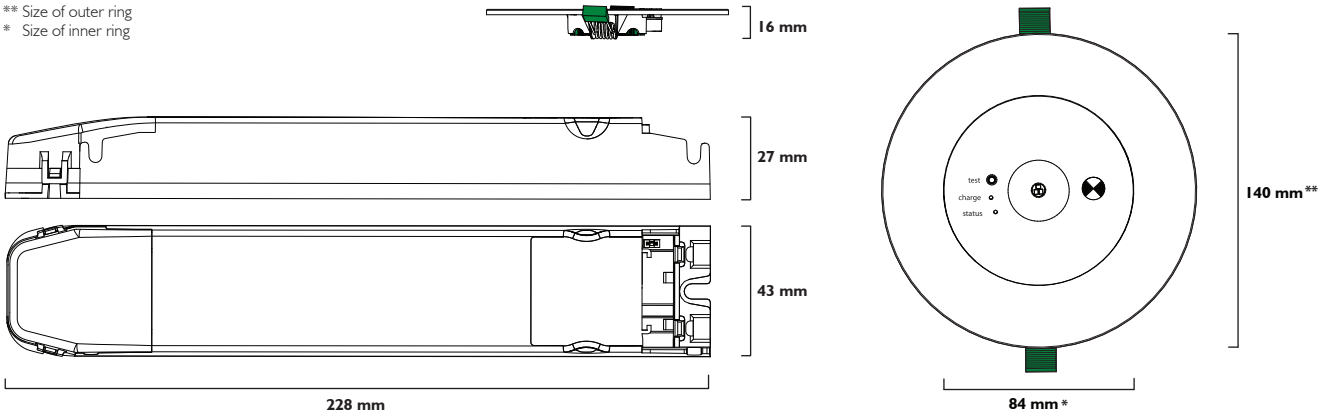

SPACING TABLE (DISTANCE BETWEEN FITTINGS)

LUX	CLASSIFICATION	MOUNTING HEIGHT (M)															
		2.1	2.4	2.7	3	3.3	3.6	4	4.5	5	6	7	8	9	10	15	20
0.2	D50	18.0	18.7	19.4	20.1	20.7	21.2	21.8	22.5	23.2	24.2	24.9	25.4	25.7	25.9	23.7	15.2
0.5	D50	13.0	13.5	14.0	14.4	14.7	15.0	15.4	15.7	16.0	16.3	16.2	15.9	15.3	14.4		
1	D50	10.1	10.5	10.8	11.0	11.2	11.3	11.4	11.5	11.5	11.1	10.2	8.6	5.2			

Datasheet is subject to change without notice Last updated: **22. January 2017_V1.5**